MAGNETIC METAL SEPARATION

msamagnetics.com

DRUM MAGNET

HOUSED MAGNETIC DRUM SEPARATION WITH THREE-PHASE GEARED DRIVE



Representative product illustration

Housed Separation. Geared Drive.

MSA Drum Magnets combine a magnetic drum, stainless steel housing and a three-phase motor with a gear reducer. Separate magnetic and nonmagnetic discharge paths are shown in the drawings. Two configurations are available: a 12-inch diameter drum with an 18-inch face, and an 18 x 24-inch rare earth Co-Force drum. Compare their drive specifications below.

FEATURES

- **Magnetic drum enclosed in stainless steel housing**
- **Separate magnetic and nonmagnetic discharges**
- **Three-phase motor with gear reducer**
- **230/460 V motor specification**
- **12-inch diameter x 18-inch face configuration**
- **18 x 24-inch rare earth Co-Force configuration**
- **Motor and reducer options vary by model**

AVAILABLE CONFIGURATIONS

DRAWING / MODEL	DRUM SIZE	MOTOR	VOLTAGE	REDUCER	MOTOR RPM
MD-1218-RE	12 x 18 in	1/3 HP	230/460 V	30:1	1,725
MSA-DRU-18-24	18 x 24 in	1 HP	230/460 V	40:1	1,725

Drum size is diameter x face width. RPM values refer to the motor.

Ordering: A signed approval drawing must accompany the purchase order for processing.

MSA Magnetics
14250 Judicial Road, Burnsville, MN 55306
Phone: 651-272-2950

MSA Magnetics is a leading supplier of industrial magnets, lifting equipment and safety tools.
For more information visit our website: msamagnetics.com

MAGNETIC METAL SEPARATION

msamagnetics.com

DRUM MAGNET

12-INCH DIAMETER X 18-INCH FACE HOUSED DRUM

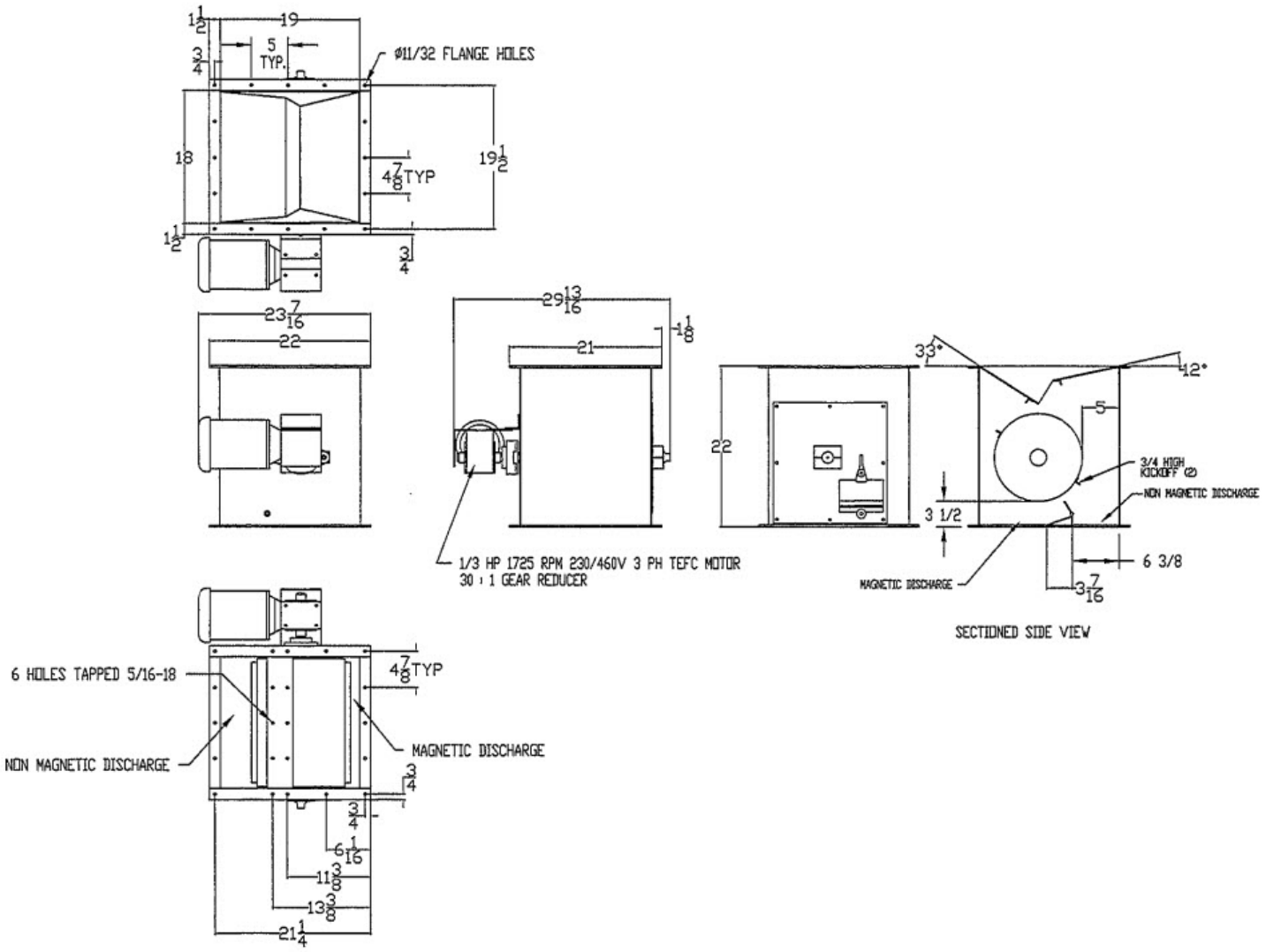

Drawing reference: MD-1218-RE Rev A

Ordering: A signed approval drawing must accompany the purchase order for processing.

MSA Magnetics
14250 Judicial Road, Burnsville, MN 55306
Phone: 651-272-2950

MSA Magnetics is a leading supplier of industrial magnets, lifting equipment and safety tools.
For more information visit our website: msamagnetics.com

DRUM MAGNET

18 X 24-INCH RARE EARTH CO-FORCE DRUM

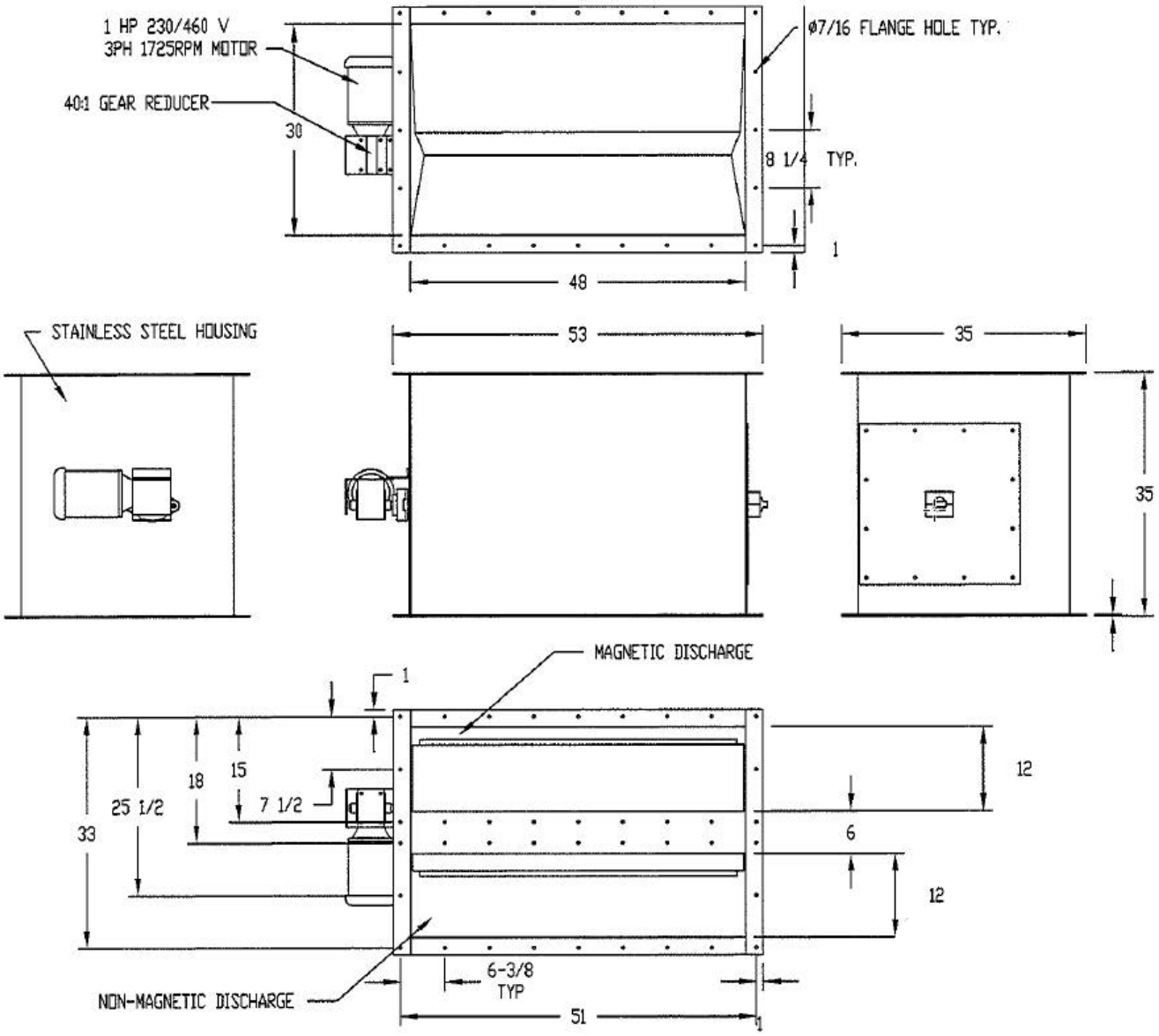

Drawing reference: MSA-DRU-18-24 Rev A

Ordering: A signed approval drawing must accompany the purchase order for processing.

MSA Magnetics
14250 Judicial Road, Burnsville, MN 55306
Phone: 651-272-2950

MSA Magnetics is a leading supplier of industrial magnets, lifting equipment and safety tools.
For more information visit our website: msamagnetics.com